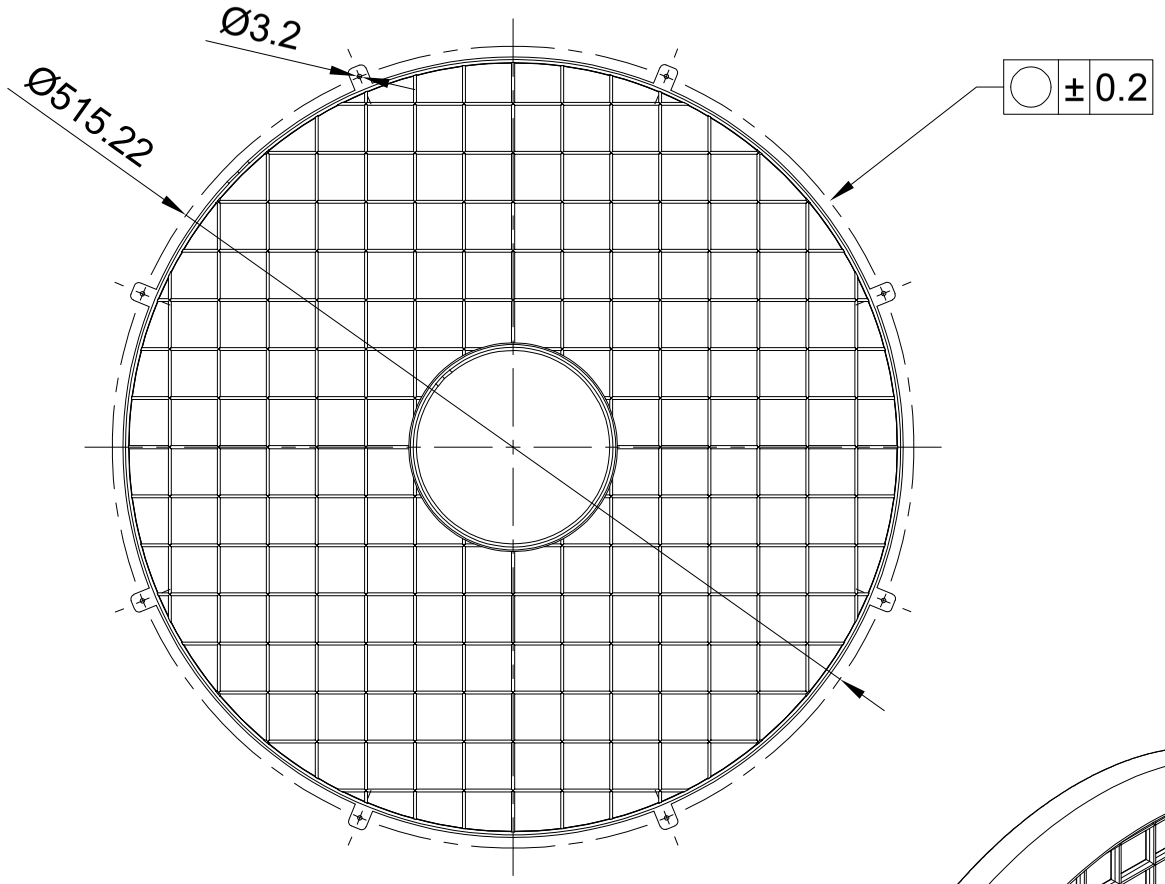

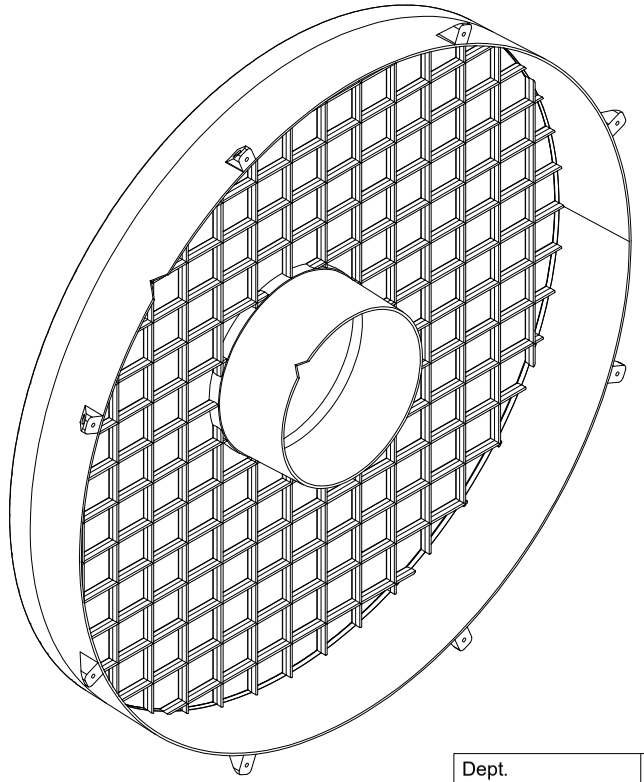

Dept.	Technical reference	Created by	Approved by
		anthony douglas 2/22/2026	
default tolerance unless otherwise specified is 40 microns.		Document type	Document status
		Title feb19_BQF_moddingformoldability	DWG No.
			Rev. / Date of issue / Sheet 1/1